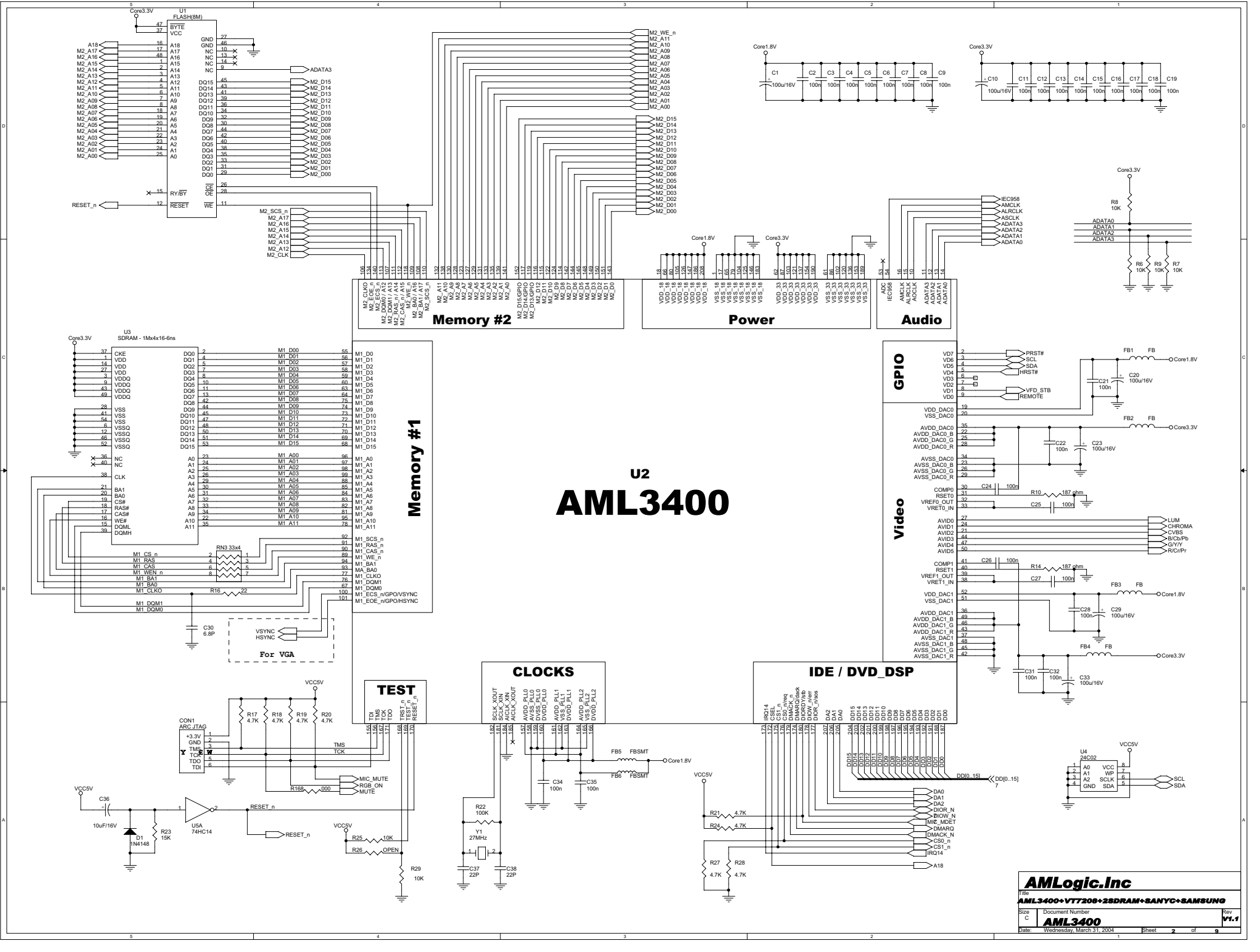
U1
FLASH(8M)
Memory #2
Power
Audio
U3
SDRAM - 1Mx4x16-6ns
Memory #1
U2
AML3400
GPIO
Video
For VGA
TEST
CLOCKS
IDE / DVD_DSP
CON1
ARC JTAG
U5A
74HC14
U4
24C02
AMLogic.Inc
AML3400+VT7205+2SDRAM+SANYC+SAMSUNG
Document Number
AML3400
Rev
V1.1
Wednesday, March 31, 2004
Sheet 2 of 9

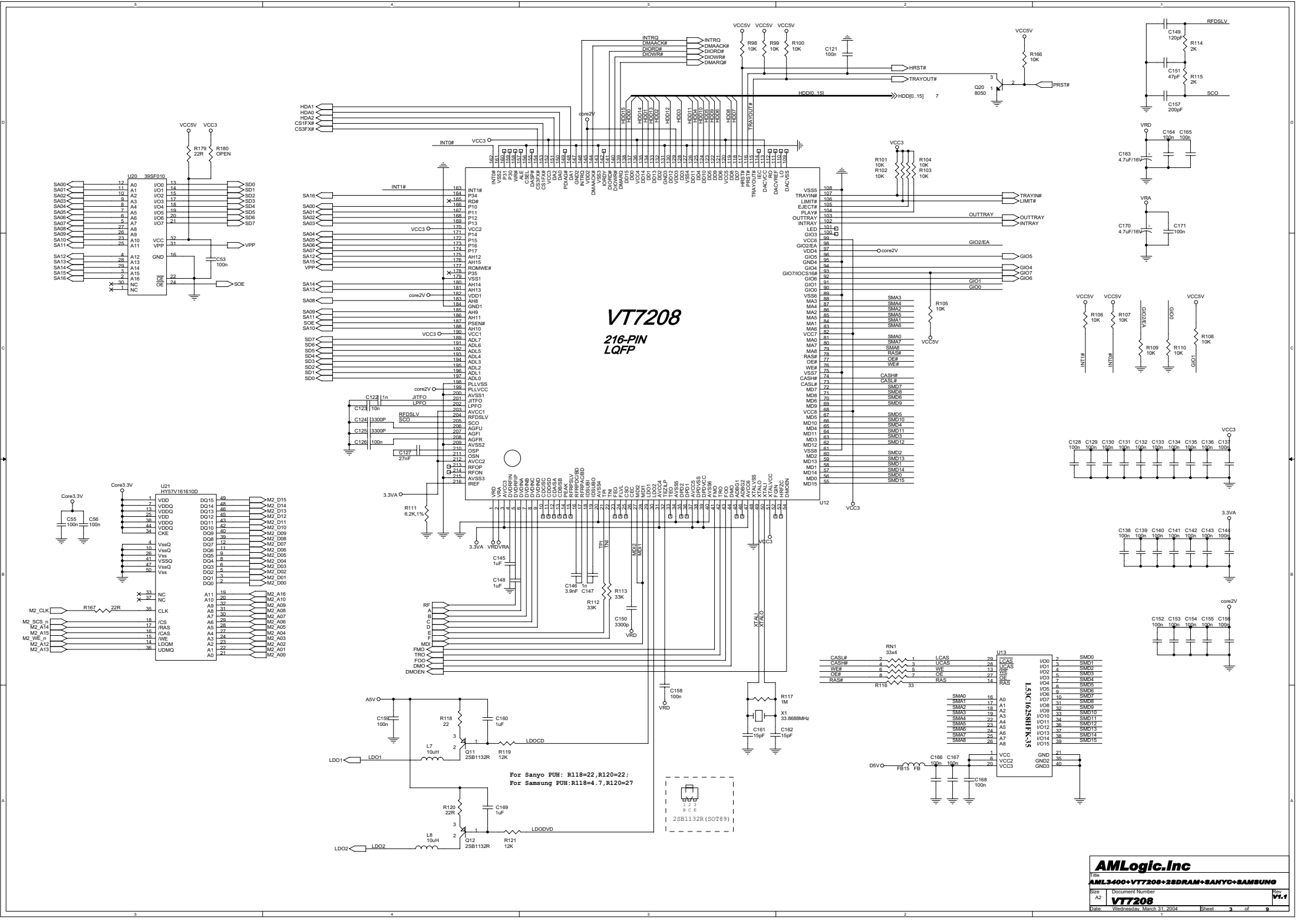
VT7208
216-PIN
LQFP
U20 39SF010
U21 HY57V161610D
U12
U13 L53C16258HFK-35
Q20 8050
Q11 2SB1132R
Q12 2SB1132R
2SB1132R(SOT89)
X1 33.8688MHz
RN1 33x4
For Sanyo PUH: R118=22,R120=22;
For Samsung PUH:R118=4.7,R120=27
AMLogic.Inc
AML3400+VT7208+2SDRAM+SANYC+SAMSUNG
VT7208
Wednesday, March 31, 2004
Sheet 3 of 9
Rev V1.1

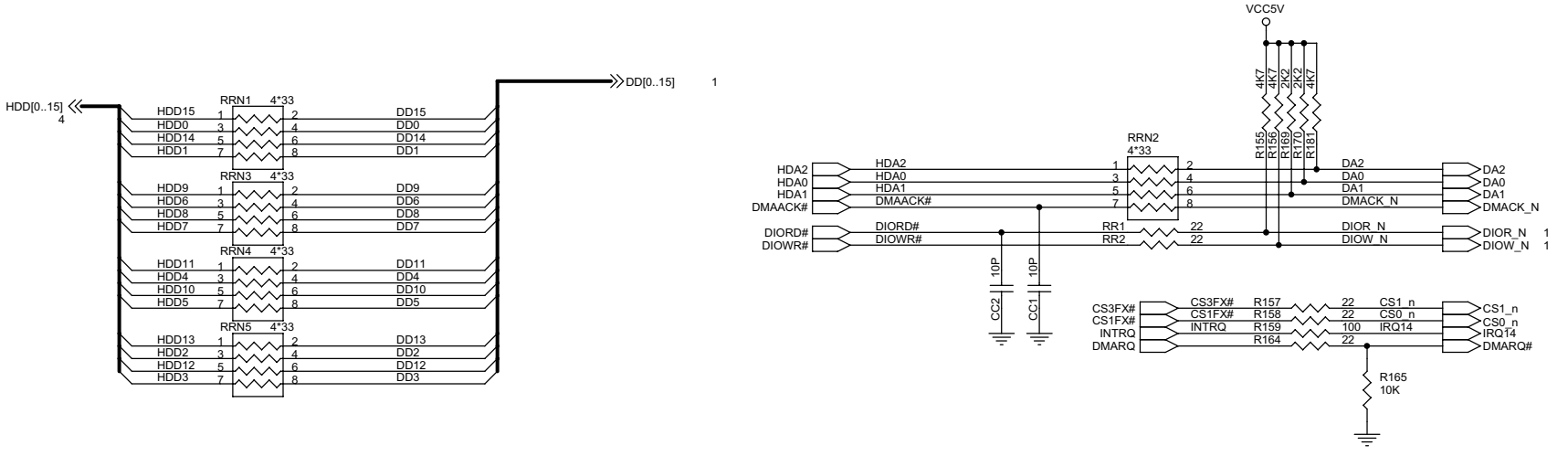

AMLogic.Inc

Title
AML3400+VT7208+2SDRAM+SANYC+SAMSUNG

Size	Document Number	Rev
Custom	**ATAPI**	**V1.1**

Date: Wednesday, March 31, 2004 Sheet **4** of **9**

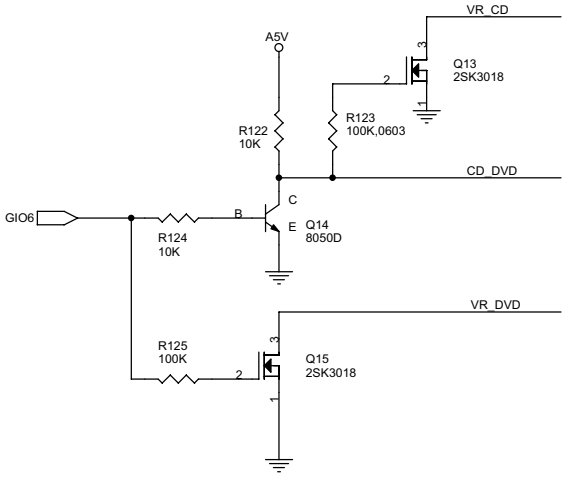

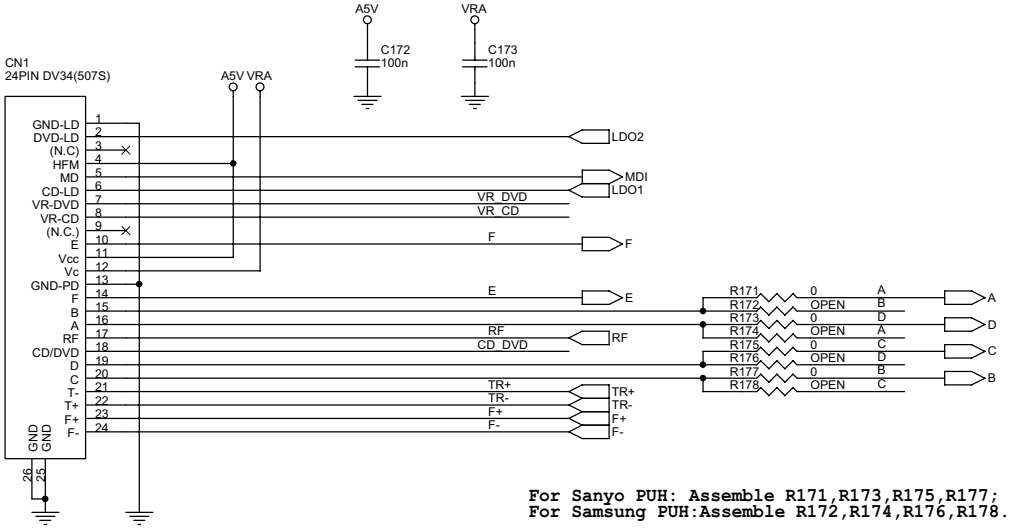

For Sanyo PUH: Assemble R171,R173,R175,R177;
For Samsung PUH:Assemble R172,R174,R176,R178.

GIO6	0	1
CD_DVD	CD	DVD
VR	VR_CD	VR_DVD

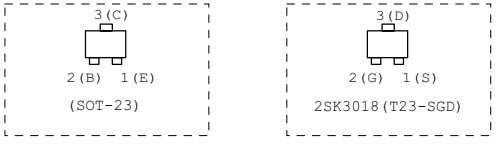

AMLogic.Inc

Title
AML3400+VT7208+2SDRAM+SANYC+SAMSUNG

Size	Document Number	Rev
Custom	**RF**	**V1.1**

Date: Wednesday, March 31, 2004 Sheet 5 of 9

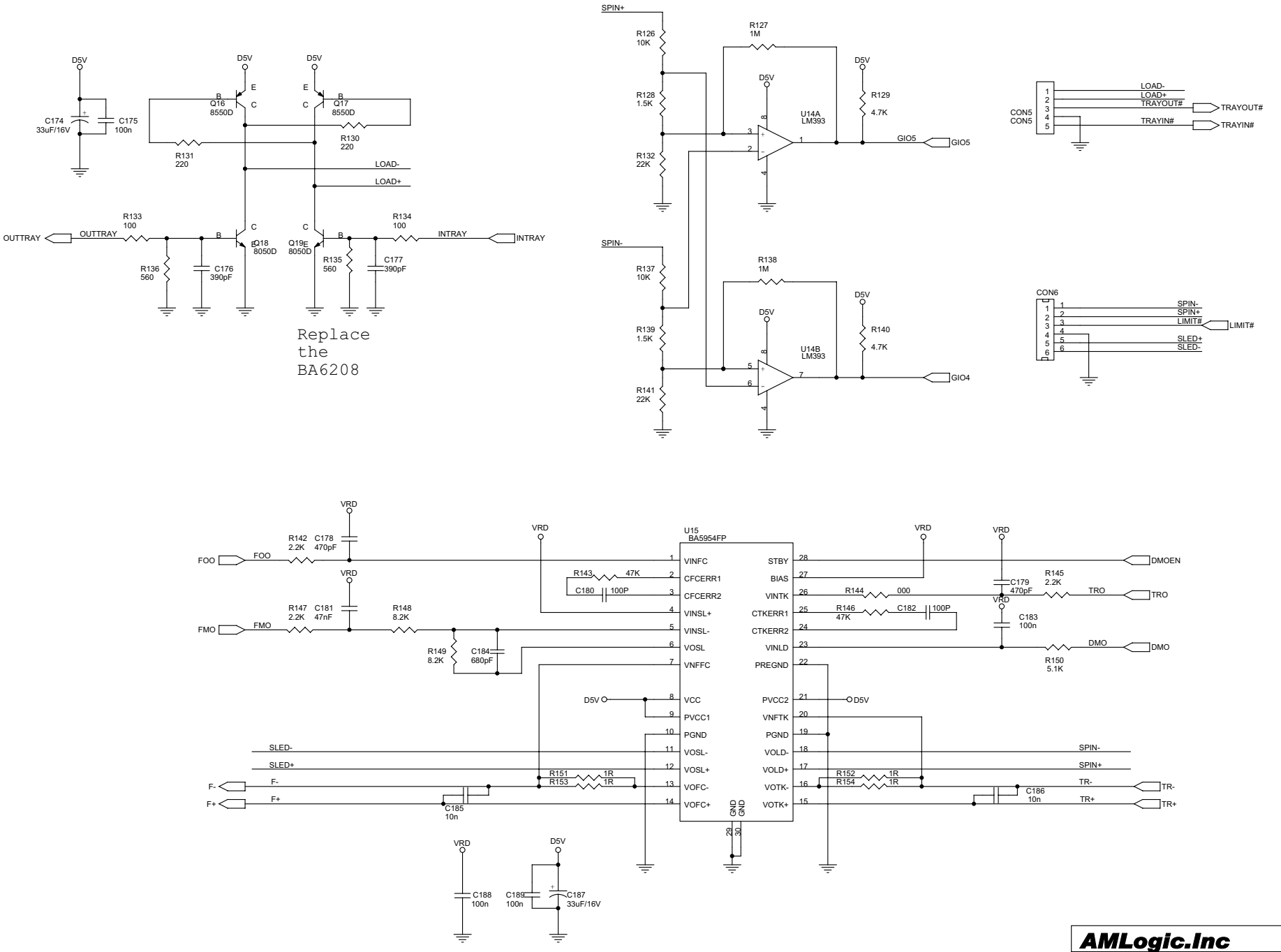

AMLogic.Inc

Title: **AML3400+VT7208+2SDRAM+SANYC+SAMSUNG**

Size	Document Number	Rev
Custom	**BA5954**	**V1.1**

Date: Wednesday, March 31, 2004 Sheet 6 of 9

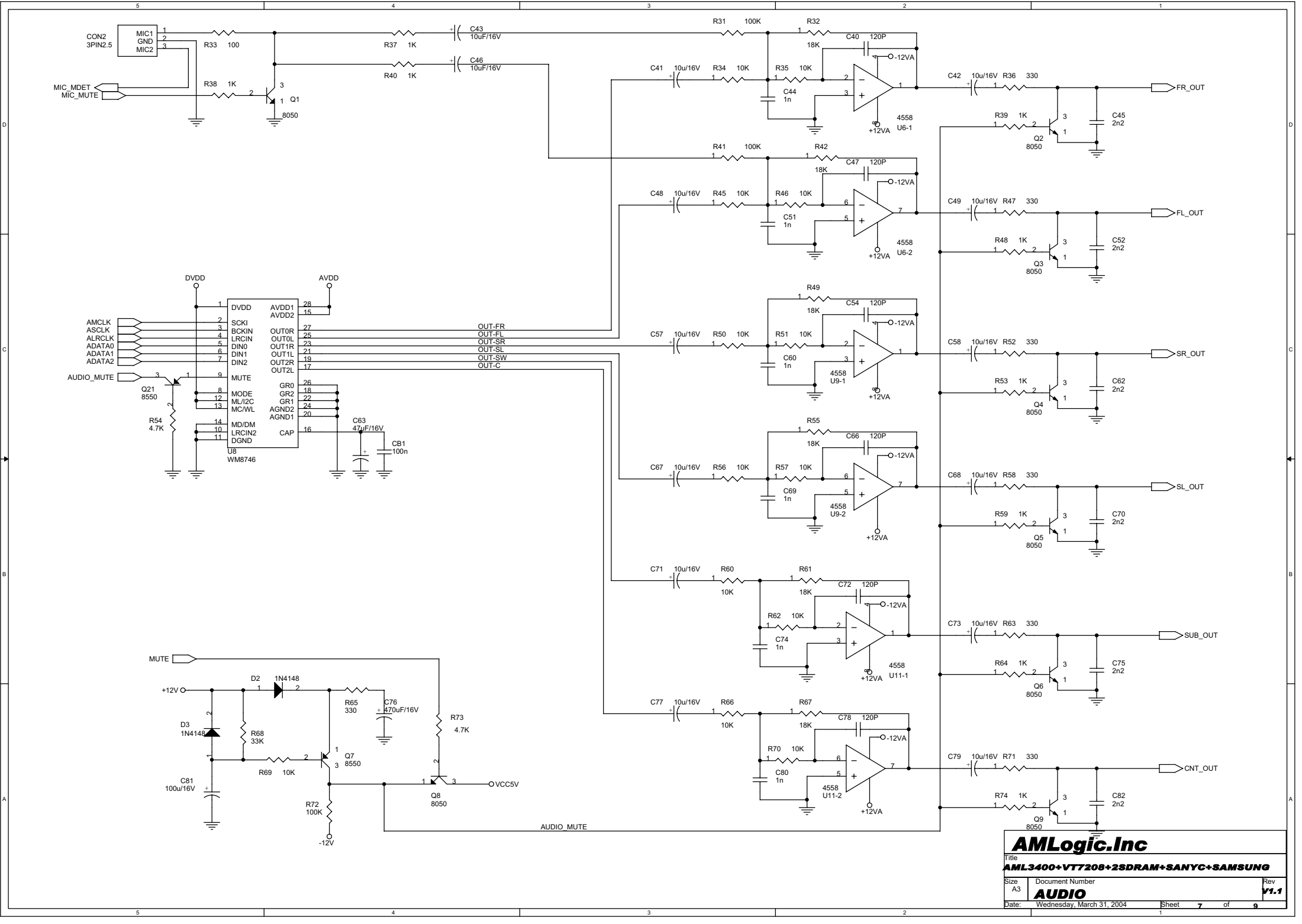
CON2
3PIN2.5
MIC1
GND
MIC2
MIC_MDET
MIC_MUTE
R33 100
R38 1K
Q1
8050
R37 1K
R40 1K
C43
10uF/16V
C46
10uF/16V
DVDD
AVDD
AMCLK
ASCLK
ALRCLK
ADATA0
ADATA1
ADATA2
AUDIO_MUTE
Q21
8550
R54
4.7K
DVDD
SCKI
BCKIN
LRCIN
DIN0
DIN1
DIN2
MUTE
MODE
ML/I2C
MC/WL
MD/DM
LRCIN2
DGND
AVDD1
AVDD2
OUT0R
OUT0L
OUT1R
OUT1L
OUT2R
OUT2L
GR0
GR2
GR1
AGND2
AGND1
CAP
U8
WM8746
C63
47uF/16V
CB1
100n
OUT-FR
OUT-FL
OUT-SR
OUT-SL
OUT-SW
OUT-C
R31 100K
R32
18K
C40 120P
-12VA
C41 10u/16V
R34 10K
R35 10K
C44
1n
4558
U6-1
+12VA
C42 10u/16V R36 330
FR_OUT
R39 1K
Q2
8050
C45
2n2
R41 100K
R42
18K
C47 120P
C48 10u/16V
R45 10K
R46 10K
C51
1n
4558
U6-2
C49 10u/16V R47 330
FL_OUT
R48 1K
Q3
8050
C52
2n2
R49
18K
C54 120P
C57 10u/16V
R50 10K
R51 10K
C60
1n
4558
U9-1
C58 10u/16V R52 330
SR_OUT
R53 1K
Q4
8050
C62
2n2
R55
18K
C66 120P
C67 10u/16V
R56 10K
R57 10K
C69
1n
4558
U9-2
C68 10u/16V R58 330
SL_OUT
R59 1K
Q5
8050
C70
2n2
C71 10u/16V
R60
10K
R61
18K
C72 120P
R62 10K
C74
1n
4558
U11-1
C73 10u/16V R63 330
SUB_OUT
R64 1K
Q6
8050
C75
2n2
C77 10u/16V
R66
10K
R67
18K
C78 120P
R70 10K
C80
1n
4558
U11-2
C79 10u/16V R71 330
CNT_OUT
R74 1K
Q9
8050
C82
2n2
MUTE
+12V
D2
1N4148
D3
1N4148
R68
33K
R69 10K
R65
330
C76
470uF/16V
Q7
8550
R73
4.7K
Q8
8050
VCC5V
C81
100u/16V
R72
100K
-12V
AUDIO_MUTE
AMLogic.Inc
Title
AML3400+VT7208+2SDRAM+SANYC+SAMSUNG
Size
A3
Document Number
AUDIO
Rev
V1.1
Date:
Wednesday, March 31, 2004
Sheet
7
of
9

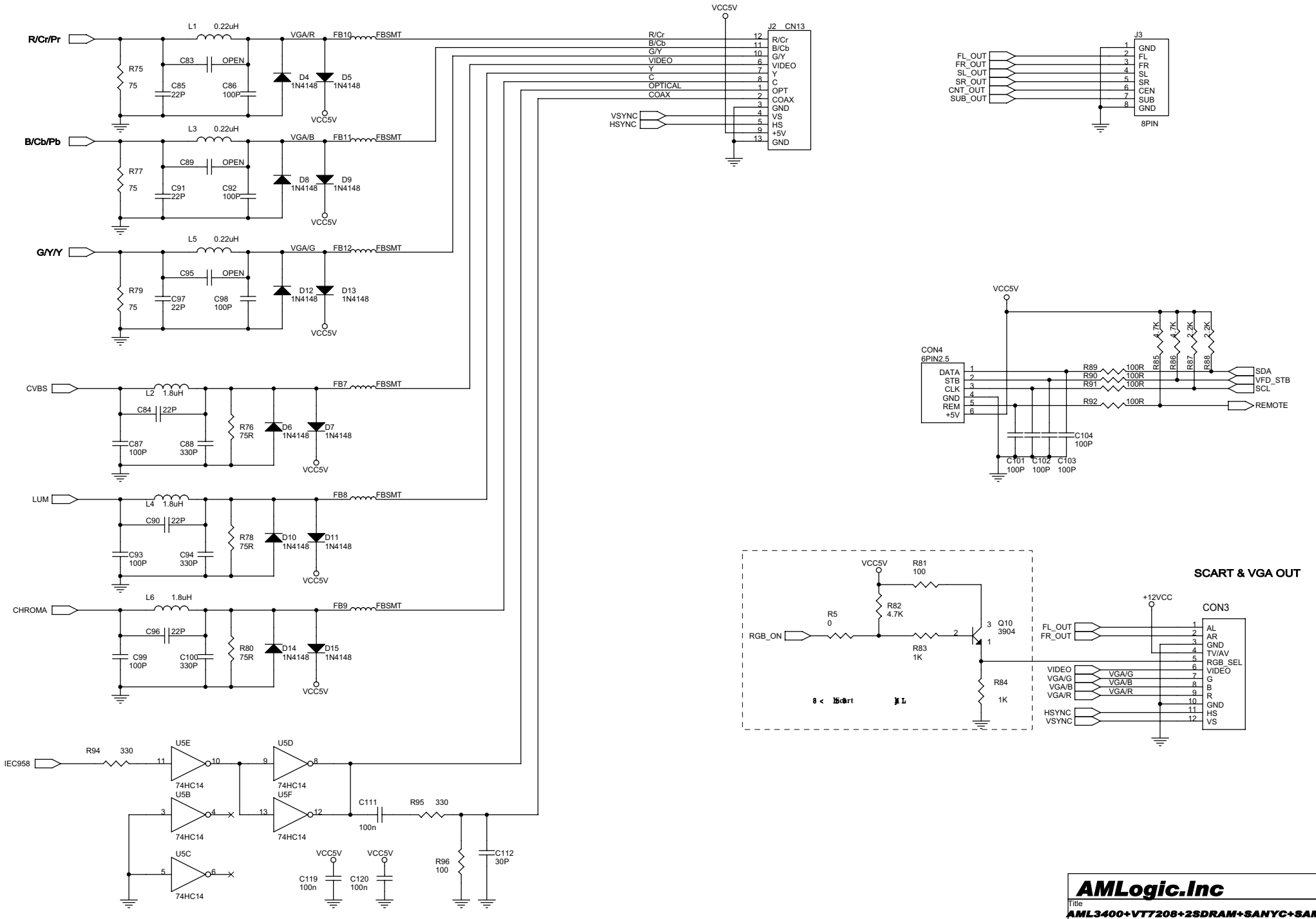

AMLogic.Inc

Title: **AML3400+VT7208+2SDRAM+SANYC+SAMSUNG**

Size: A3 | Document Number: **VIDEO** | Rev: **V1.1**

Date: Wednesday, March 31, 2004 | Sheet 8 of 9

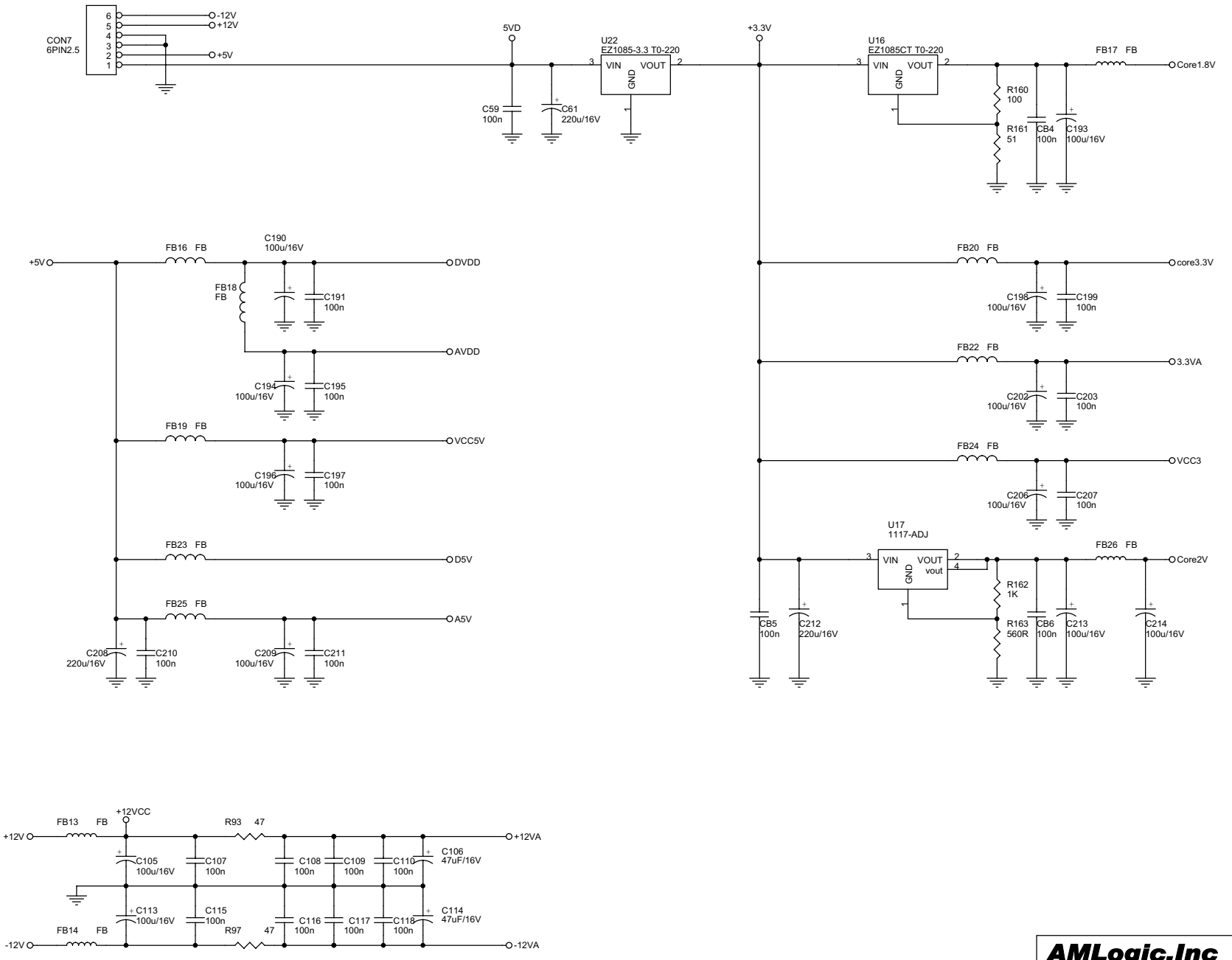

AMLogic.Inc

Title: **AML3400+VT7208+2SDRAM+SANYC+SAMSUNG**

Size	Document Number	Rev
Custom	**POWER**	**V1.1**

Date: Wednesday, March 31, 2004 Sheet 9 of 9