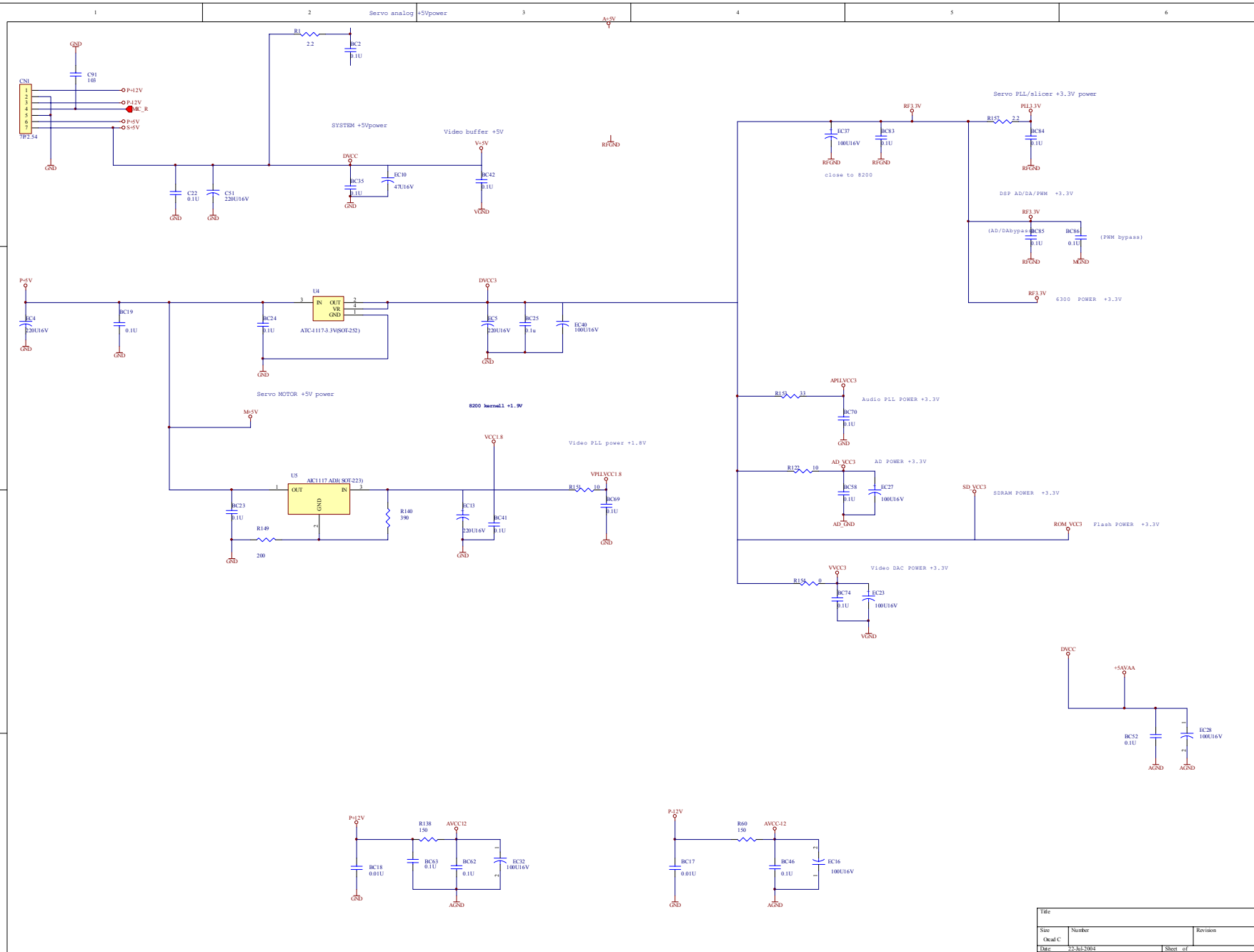
Servo analog +5Vpower
A+5V
GND
C91
103
CN1
P+12V
P-12V
MC_R
P+5V
S+5V
7P2.54
R1
2.2
BC2
0.1U
SYSTEM +5Vpower
Video buffer +5V
V+5V
RFGND
DVCC
BC35
0.1U
EC10
47U16V
BC42
0.1U
VGND
C22
0.1U
C51
220U16V
Servo PLL/slicer +3.3V power
RF3.3V
PLL3.3V
R157
2.2
EC37
100U16V
BC83
0.1U
BC84
0.1U
close to 8200
DSP AD/DA/PWM +3.3V
(AD/DAbypass)
BC85
0.1U
BC86
0.1U
(PWM bypass)
MGND
6300 POWER +3.3V
P+5V
EC4
220U16V
BC19
0.1U
U4
IN
OUT
VR
GND
ATC-4117-3.3V(SOT-252)
BC24
0.1U
DVCC3
EC5
220U16V
BC25
0.1u
EC40
100U16V
Servo MOTOR +5V power
M+5V
8200 kernell +1.9V
APLLVCC3
R155
33
Audio PLL POWER +3.3V
BC70
0.1U
VCC1.8
Video PLL power +1.8V
U5
AIC1117 ADJ( SOT-223)
OUT
IN
GND
VPLLVCC1.8
R151
10
BC69
0.1U
BC23
0.1U
R149
200
R140
390
EC13
220U16V
BC41
0.1U
AD_VCC3
AD POWER +3.3V
R172
10
BC58
0.1U
EC27
100U16V
AD_GND
SD_VCC3
SDRAM POWER +3.3V
ROM_VCC3
Flash POWER +3.3V
VVCC3
Video DAC POWER +3.3V
R154
0
BC74
0.1U
EC23
100U16V
VGND
DVCC
+5AVAA
BC52
0.1U
EC28
100U16V
AGND
P-12V
R138
150
AVCC12
BC18
0.01U
BC63
0.1U
BC62
0.1U
EC32
100U16V
R60
150
BC17
0.01U
BC46
0.1U
EC16
100U16V
Title
Size
Number
Revision
Oead C
Date: 23-Jul-2004
Sheet of
File: F:\AV technic data\8056300PW X\8281SCL.Ddb
Drawn by

| | R33 | R48 | R49 | R50 | R25 | R26 | R166 | R167 | R83 | C56 | C60 | R79 | R2 | R18 | R93 |
|---|---|---|---|---|---|---|---|---|---|---|---|---|---|---|---|
| SANYO OPU | NC | NC | 0 | 0 | 1K | 1K | 0 | 0 | 20K | 1000P | 103 | 5.1K | 10 | 10 | 39K |
| OPU54.61 | 0 | 0 | NC | NC | 0 | 0 | 33 | 47 | 3.3K | 2700P | NC | NC | 10 | 10 | 39K |
| OPU54.20 | 0 | 0 | NC | NC | 0 | 0 | 33 | 0 | 3.3K | 2700P | NC | NC | 5.1 | 5.1 | 68K |

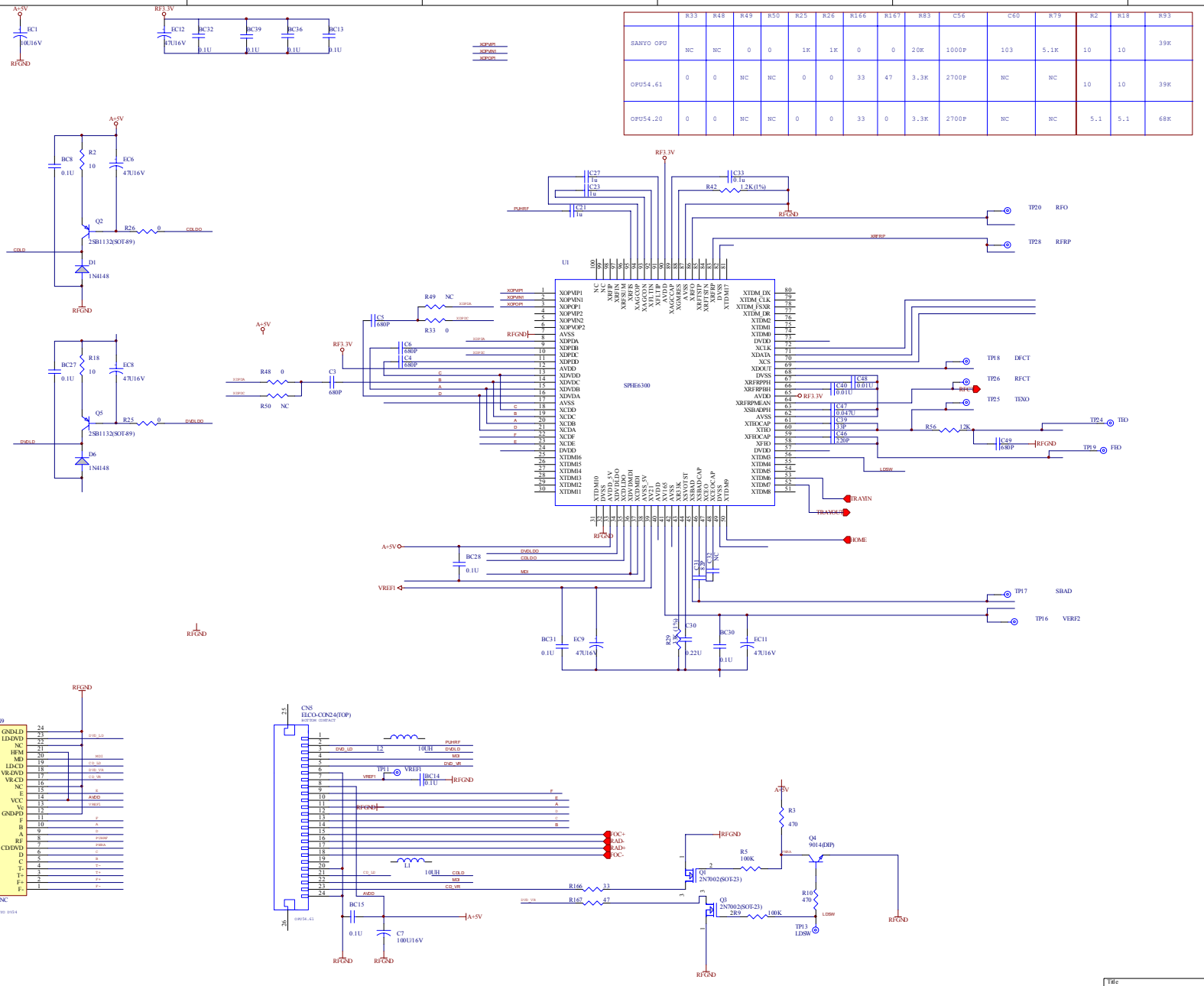

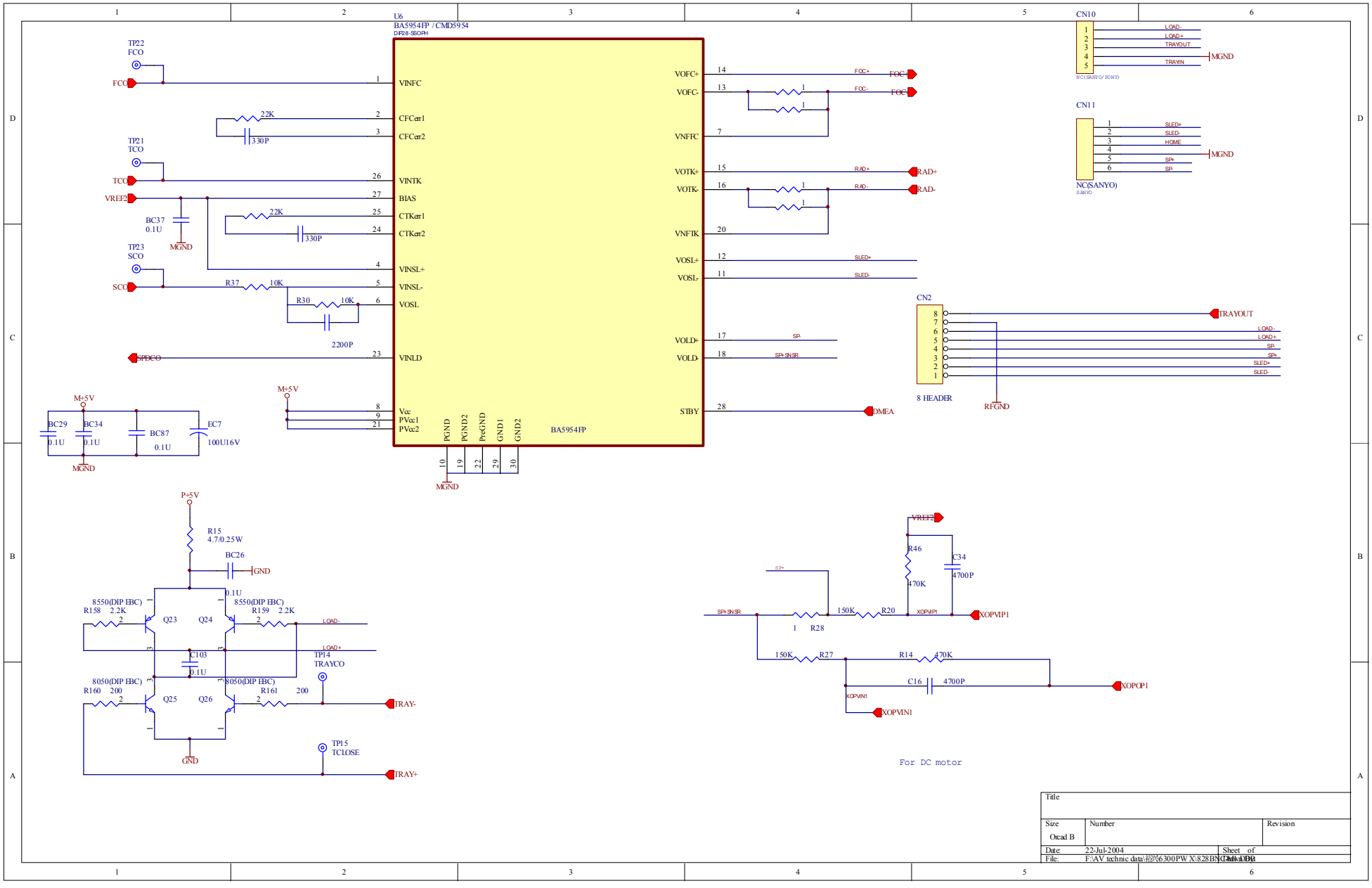
U6
BA5954FP / CMD5954
DIP28-SSOP-H
BA5954FP
VINFC
CFCerr1
CFCerr2
VINTK
BIAS
CTKerr1
CTKerr2
VINSL+
VINSL-
VOSL
VINLD
Vcc
PVcc1
PVcc2
PGND
PGND2
PreGND
GND1
GND2
VOFC+
VOFC-
VNFFC
VOTK+
VOTK-
VNFTK
VOSL+
VOSL-
VOLD+
VOLD-
STBY
TP22
FCO
TP21
TCO
VREF2
BC37
0.1U
MGND
TP23
SCO
R37
10K
R30
10K
2200P
SPDCO
M+5V
BC29
0.1U
BC34
0.1U
BC87
0.1U
EC7
100U16V
22K
330P
FOC+
FOC-
RAD+
RAD-
SLED+
SLED-
SP-
SP-SNSR
DMEA
CN10
LOAD-
LOAD+
TRAYOUT
TRAYIN
NC(SANYO/SONY)
CN11
SLED+
SLED-
HOME
SP+
SP-
NC(SANYO)
CN2
8 HEADER
RFGND
P+5V
R15
4.7/0.25W
BC26
GND
0.1U
8550(DIP EBC)
R158 2.2K
R159 2.2K
Q23
Q24
C103
0.1U
TP14
TRAYCO
8050(DIP EBC)
R160 200
R161 200
Q25
Q26
TRAY-
TP15
TCLOSE
TRAY+
VREF2
R46
470K
C34
4700P
SP+
SP-SNSR
150K
R20
XOPVIP1
R28
R27
R14
470K
C16
4700P
XOPOP1
XOPVIN1
For DC motor
Title
Size
Orcad B
Number
Revision
Date: 22-Jul-2004
Sheet of
File: F:\AV technic data\KPX6300PW X\828BNCD\Rev1.DDB

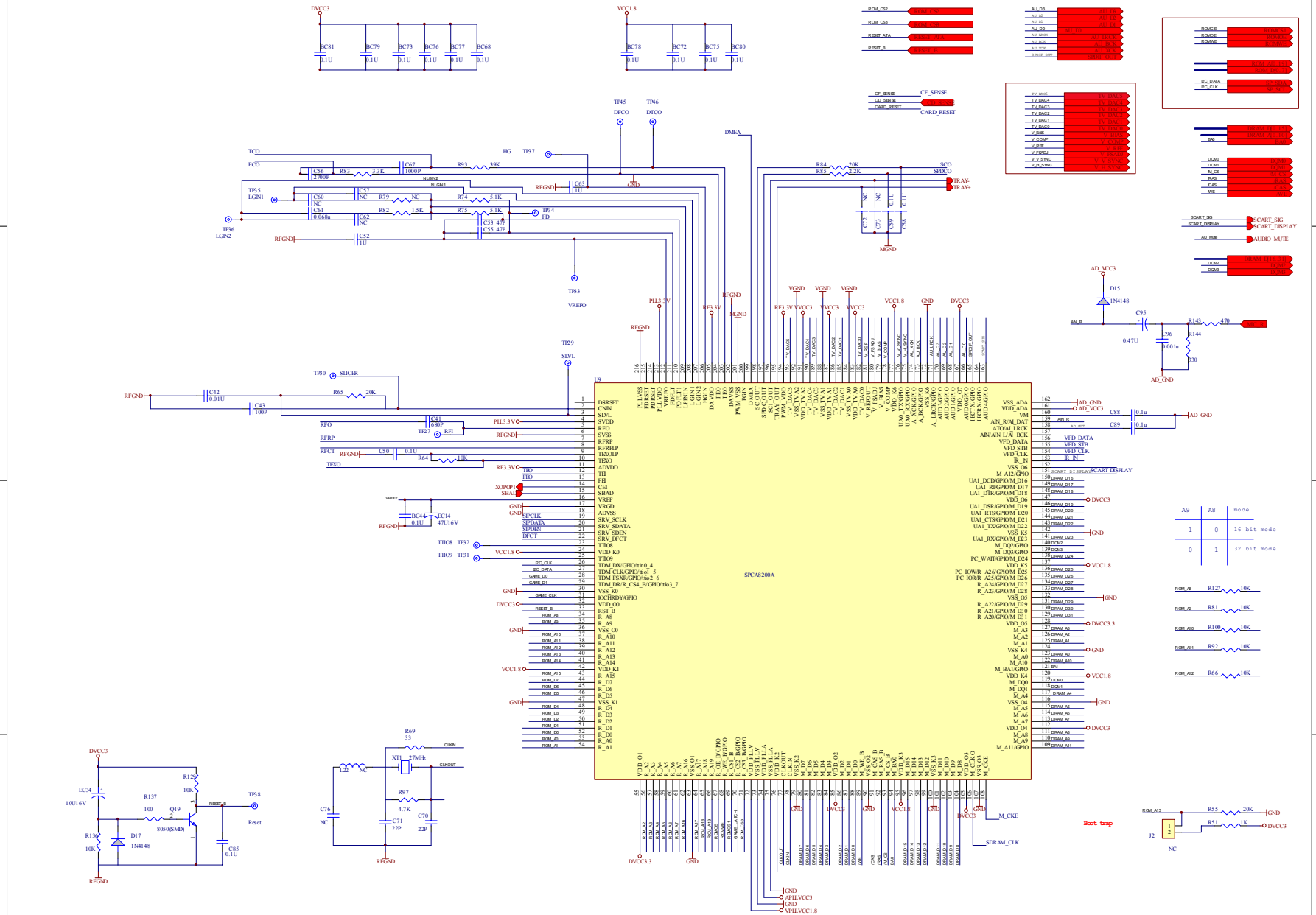
U9
SPCA8200A
DSRSET
CNIN
SLVL
SVDD
RFO
SVSS
RFRP
RFRPLP
TEXOLP
TEXO
ADVDD
TEI
FEI
CEI
SBAD
VREF
VRGD
ADVSS
SRV_SCLK
SRV_SDATA
SRV_SDEN
SRV_DFCT
TTIO8
VDD_K0
TTIO9
TDM_DX/GPIO/tio0_4
TDM_CLK/GPIO/tio1_5
TDM/FSXR/GPIO/tio2_6
TDM_DR/R_CS4_B/GPIO/tio3_7
VSS_K0
IOCHRDY/GPIO
VDD_O0
RST_B
R_A8
R_A9
VSS_O0
R_A10
R_A11
R_A12
R_A13
R_A14
VDD_K1
R_A15
R_D7
R_D6
R_D5
VSS_K1
R_D4
R_D3
R_D2
R_D1
R_D0
R_A0
R_A1
VSS_ADA
VDD_ADA
VM
AIN_R/AI_DAT
AIN/AIN_L/AI_BCK
VFD_DATA
VFD_STB
VFD_CLK
IR_IN
VSS_O6
M_A12/GPIO
UA1_DCD/GPIO/M_D16
UA1_RI/GPIO/M_D17
UA1_DTR/GPIO/M_D18
VDD_O6
UA1_DSR/GPIO/M_D19
UA1_RTS/GPIO/M_D20
UA1_CTS/GPIO/M_D21
UA1_TX/GPIO/M_D22
VSS_K3
UA1_RX/GPIO/M_D23
M_DQ2/GPIO
M_DQ3/GPIO
PC_WAIT/GPIO/M_D24
VDD_K5
PC_IOWR_A26/GPIO/M_D25
PC_IOR/R_A25/GPIO/M_D26
R_A24/GPIO/M_D27
R_A23/GPIO/M_D28
VSS_O5
R_A22/GPIO/M_D29
R_A21/GPIO/M_D30
R_A20/GPIO/M_D31
VDD_O5
M_A3
M_A2
M_A1
VSS_K4
M_A0
M_A10
M_BA1/GPIO
VDD_K4
M_DQ0
M_DQ1
M_A4
VSS_O4
M_A5
M_A6
M_A7
VDD_O4
M_A8
M_A9
M_A11/GPIO
VDD_O1
R_A2
R_A3
R_A4
R_A5
R_A6
R_A7
R_A18
VSS_O1
R_A17
R_A16
R_A19
R_OE_B/GPIO
R_WR_B/GPIO
R_CS_B
R_CS2_B/GPIO
VDD_PLLV
VSS_PLLV
VDD_PLLA
VSS_PLLA
CLKOUT
CLKIN
M_D7
M_D6
M_D5
M_D4
VDD_O2
M_D3
M_D2
M_D1
M_D0
VSS_O2
M_CAS_B
M_RAS_B
M_CS_B
M_D15
M_D14
M_D13
M_D12
VSS_O3
M_D11
M_D10
M_D9
M_D8
VDD_O3
M_CKE
M_CK
M_CK_B
M_RAS
M_CAS
M_WE
M_DQM
M_DQS
M_CS
M_BA0
M_BA1
M_A13
M_A12
M_A11
M_A10
M_A9
M_A8
M_A7
M_A6
M_A5
M_A4
M_A3
M_A2
M_A1
M_A0
VDD_O4
M_D0
M_D1
M_D2
M_D3
VSS_O4
M_D4
M_D5
M_D6
M_D7
VDD_O5
M_D8
M_D9
M_D10
M_D11
VSS_O5
M_D12
M_D13
M_D14
M_D15
VDD_O6
M_A0
M_A1
M_A2
M_A3
VSS_O6
M_A4
M_A5
M_A6
M_A7
VDD_O6
M_A8
M_A9
M_A10
M_A11
VDD_O7
AUDIO_O7
DFCT_OUT
VSS_O7
AUDIO_O6
DFCT_IN
VDD_O6
AUDIO_O5
AUDIO_O4
AUDIO_O3
AUDIO_O2
AUDIO_O1
AUDIO_O0
VDD_O7
AUDIO_O7
AUDIO_O6
AUDIO_O5
AUDIO_O4
AUDIO_O3
AUDIO_O2
AUDIO_O1
AUDIO_O0
VDD_O7
VSS

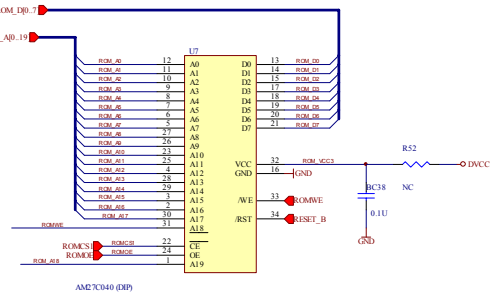


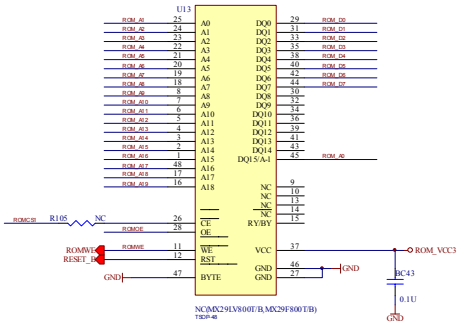


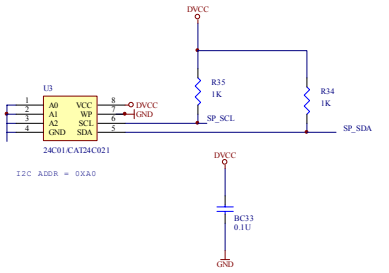


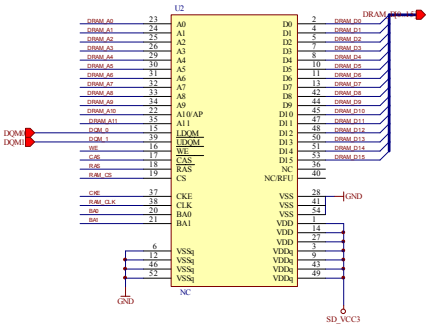


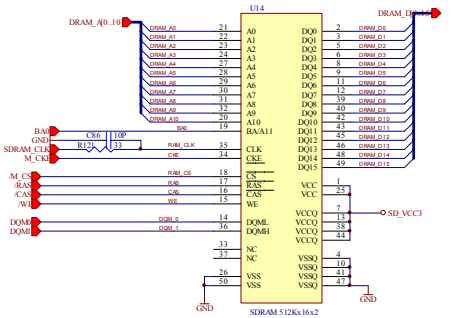


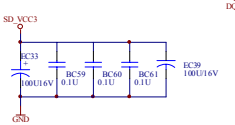


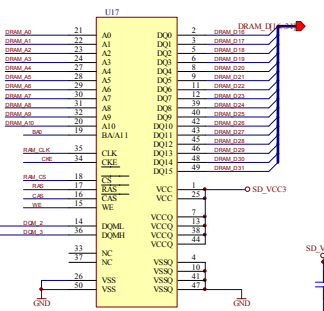


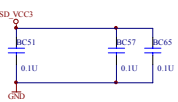


| Title | | |
|---|---|---|
| Size: Oread C | Number | Revision |
| Date: 22-Jul-2004 | | Sheet of |
| File: F:\AV tachnic data\8256300PW X\8283\7.sch | | |

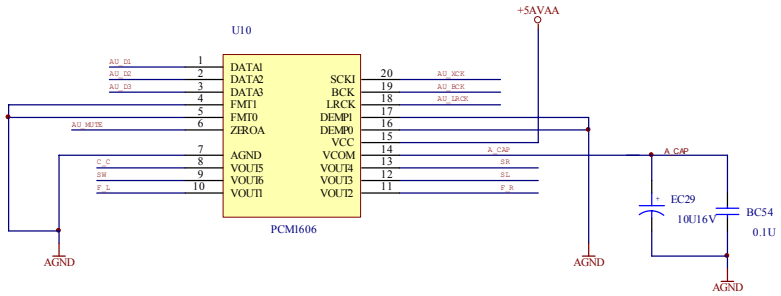


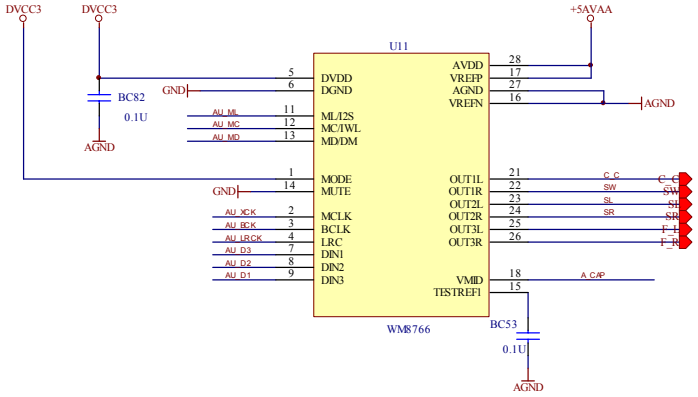


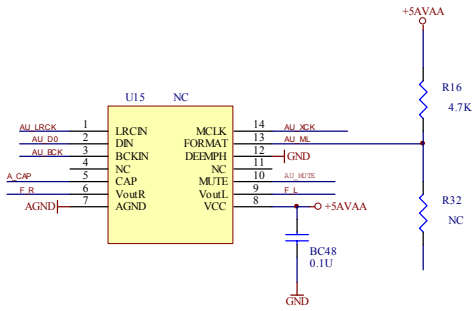


| WM8726 Format Setting(AU_ML) |
|---|
| 0:16 bits, Right justified |
| 1:24 bits, I2S |

| WM8761 Format Setting(AU_ML) |
|---|
| 0:24 bits, Right justified |
| 1:24 bits, I2S |

| Title | | |
|---|---|---|
| Size Orcad B | Number | Revision |
| Date: 22-Jul-2004 | Sheet of | |
| File: F:\AV technic data\ﾀﾞｳﾝ6300PW X\828BN\DAC.DDB | | |

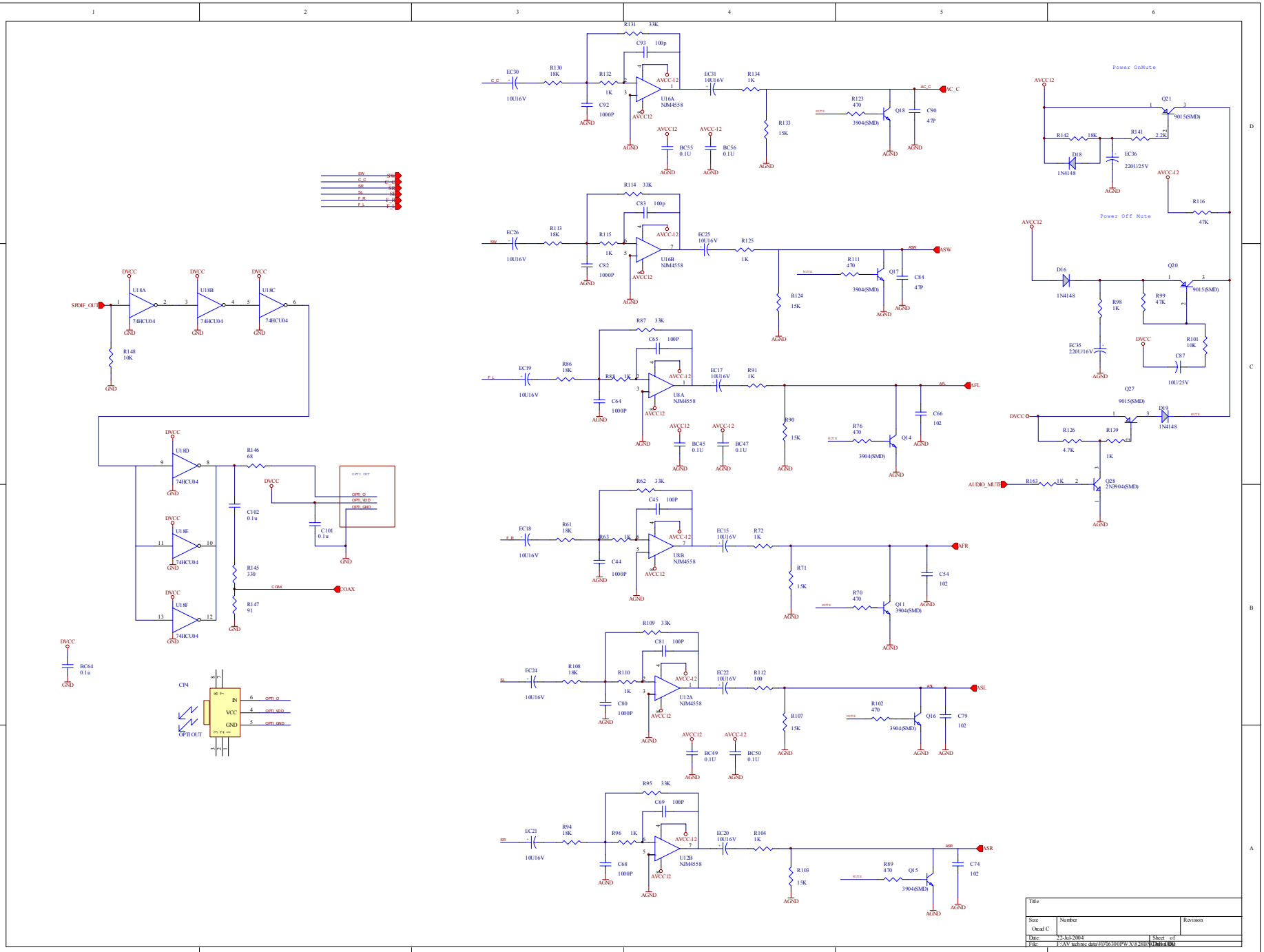
Power OnMute
Power Off Mute
U16A NJM4558
U16B NJM4558
U8A NJM4558
U8B NJM4558
U12A NJM4558
U12B NJM4558
U18A 74HCU04
U18B 74HCU04
U18C 74HCU04
U18D 74HCU04
U18E 74HCU04
U18F 74HCU04
Q21 9015(SMD)
Q20 9015(SMD)
Q27 9015(SMD)
Q18 3904(SMD)
Q17 3904(SMD)
Q14 3904(SMD)
Q11 3904(SMD)
Q16 3904(SMD)
Q15 3904(SMD)
Q28 2N3904(SMD)
D18 1N4148
D16 1N4148
D19 1N4148
CP4
OPTI OUT
SPDIF_OUT
COAX
AC_C
ASW
AFL
AFR
ASL
ASR
AUDIO_MUTE
Title
Size
Number
Revision
Date: 22-Jul-2004
Sheet of
File: F:\AV technic data\8956.300PW X.8.2\8956.300.SCH

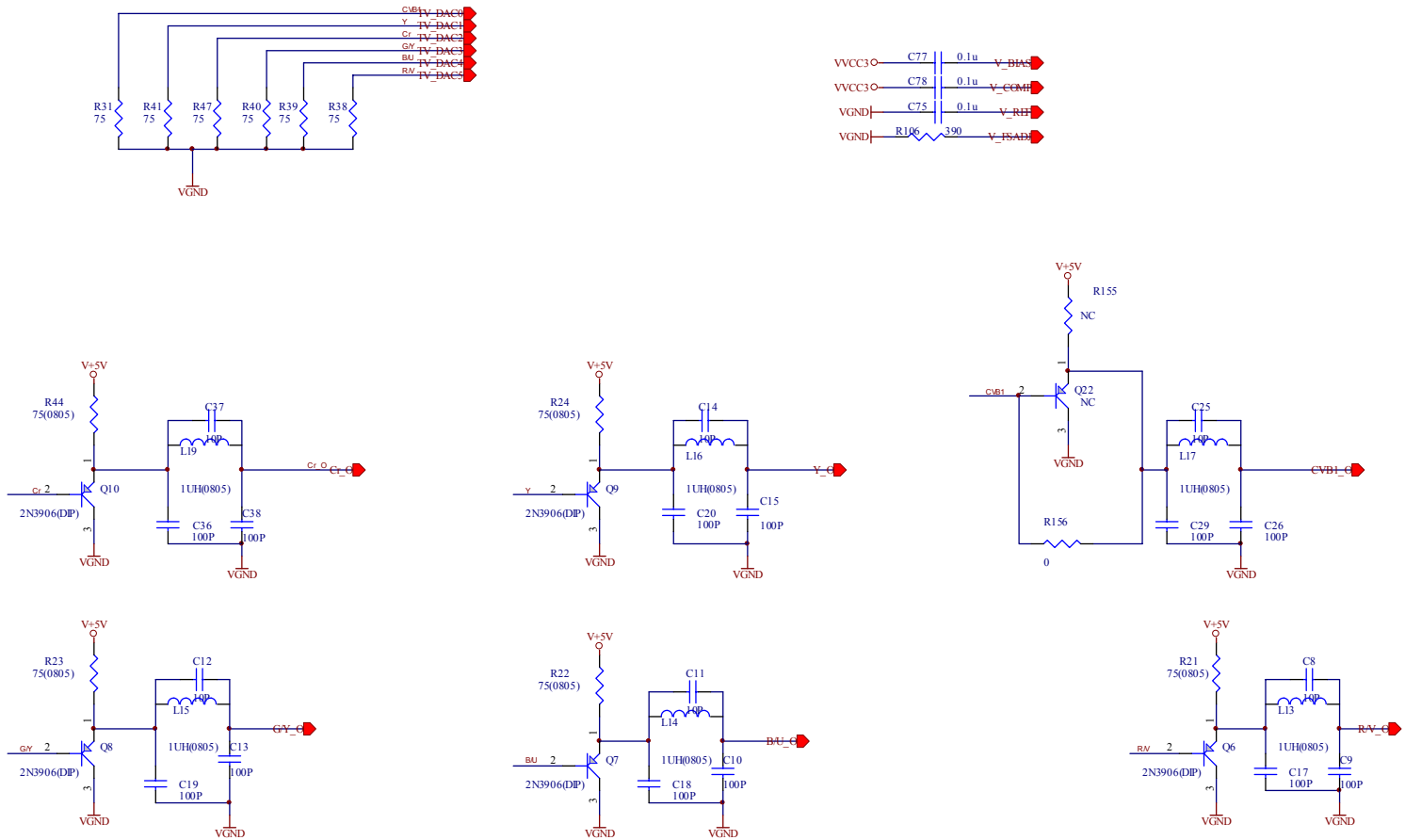


| Title | | |
|---|---|---|
| Size: Orcad B | Number | Revision |
| Date: 22-Jul-2004 | Sheet of | |
| File: F:\AV technic data\ipx\6300PWX\828BN\Drawing.DDB | | |

Components for SCART interface:

R19,R58,R59,R57,R67=4.7K

R45,R68=1K

Q12,Q13=2N3904

THE COMPONENTS FOR GAME PORT:

THE RESISTOR VALUE OF R128,R135,R162,R164 IS 2K

THE RESISTOR VALUE OF R150,R152 IS 200

THE CAPACITOR VALUE OF C94,C106,C104,C105 IS 470P

Q29 AND Q30 ARE 2N3906

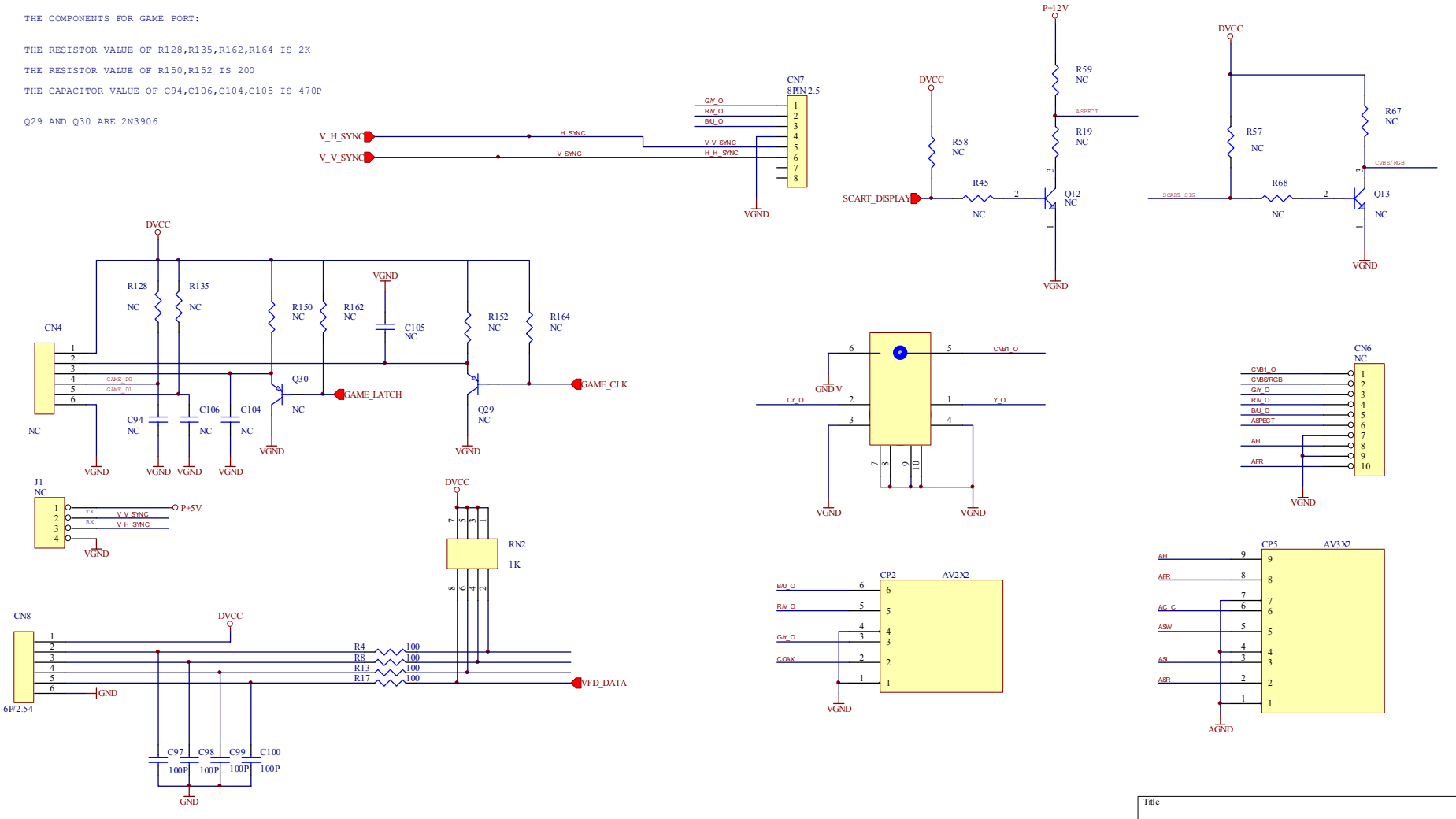


| Title | | |
|---|---|---|
| Size Orcad B | Number | Revision |
| Date 22-Jul-2004 | | Sheet of |
| File: F:\AV technic data\ | | |